Connecting kit -

12 300 970 90

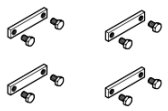

- width 75mm
- height 15 mm

For connecting horizontally and vertically mounted xGRID installation tracks.

Connecting kit -

12 300 970 90

mm [inches]

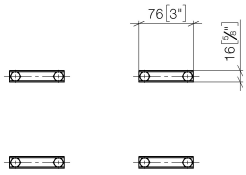

Connecting kit -

12 300 970 90

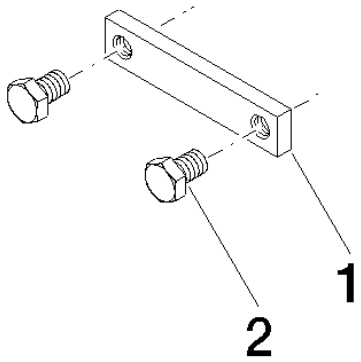

Spare parts list

No.	Item Number	Name	Quantity used	Delivery time
1	09 17 20 100 90	holder	4	60
2	09 30 30 152 90	screw	8	2